REVISIONS	
ISS	DESCRIPTION\DATE
	12/19/03"

RoHS COMPLIANT

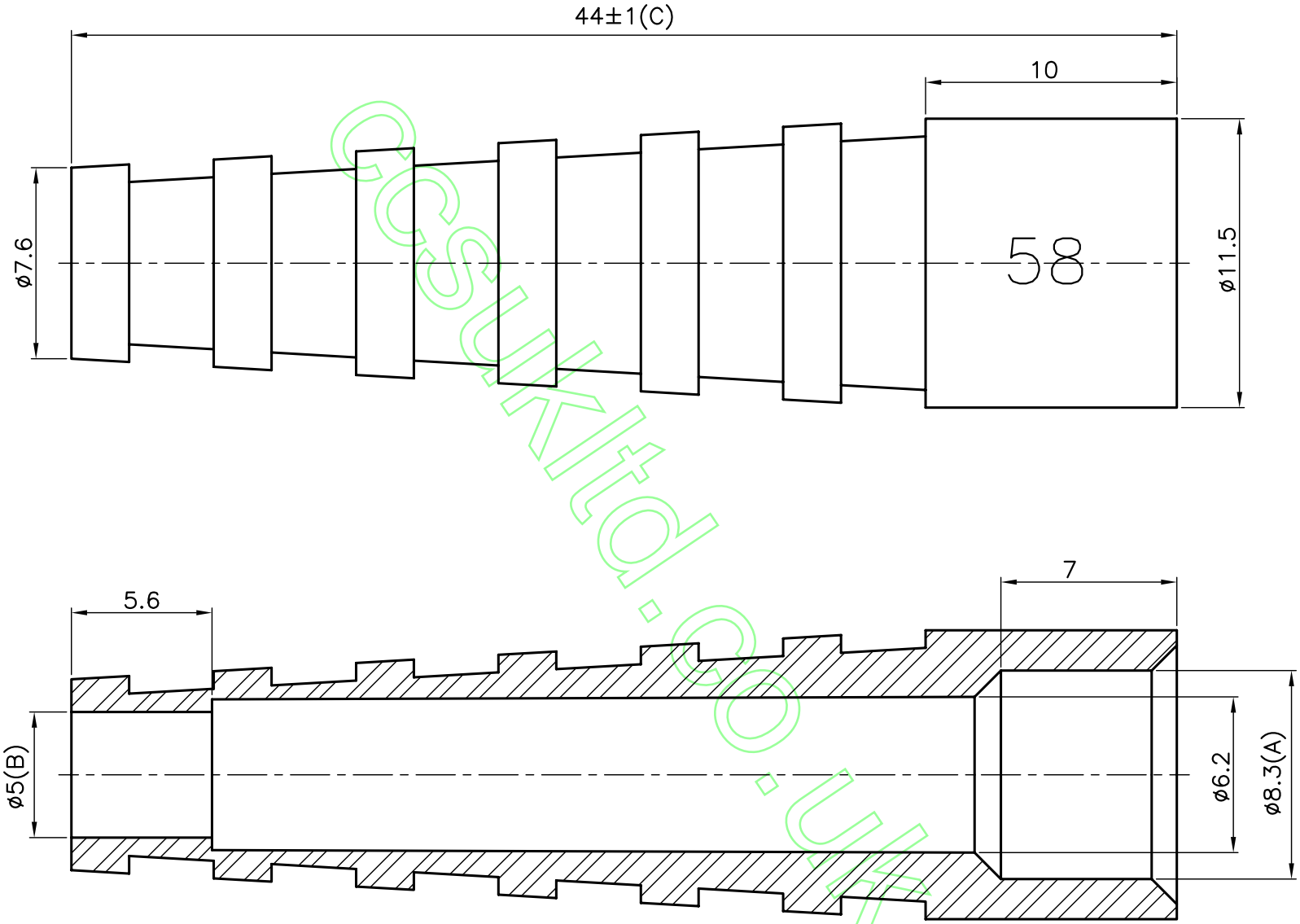

ccsukltd.co.uk

Temperature Range: −15°C~+60°C

CONNECTORS CABLES
CCS
SPECIALISTS LTD.

APRD:	UNLESS OTHERWISE SPECIFIED TOLERANCES 0.5–6 = ±0.2 >6–30 = ±0.4 >30–120 = ±0.6 >120–315 = ±1 >315–1000 = ±1.6 ANGLES = ±5°		TITLE: 58u防水套：PVC
CHKD:		UNIT: mm	
DR:		SCALE: 4/1	PART NO: CB58COLOUR
		SHEET: .	DRAWING NO: 16–0001

ISO 9001 certificate